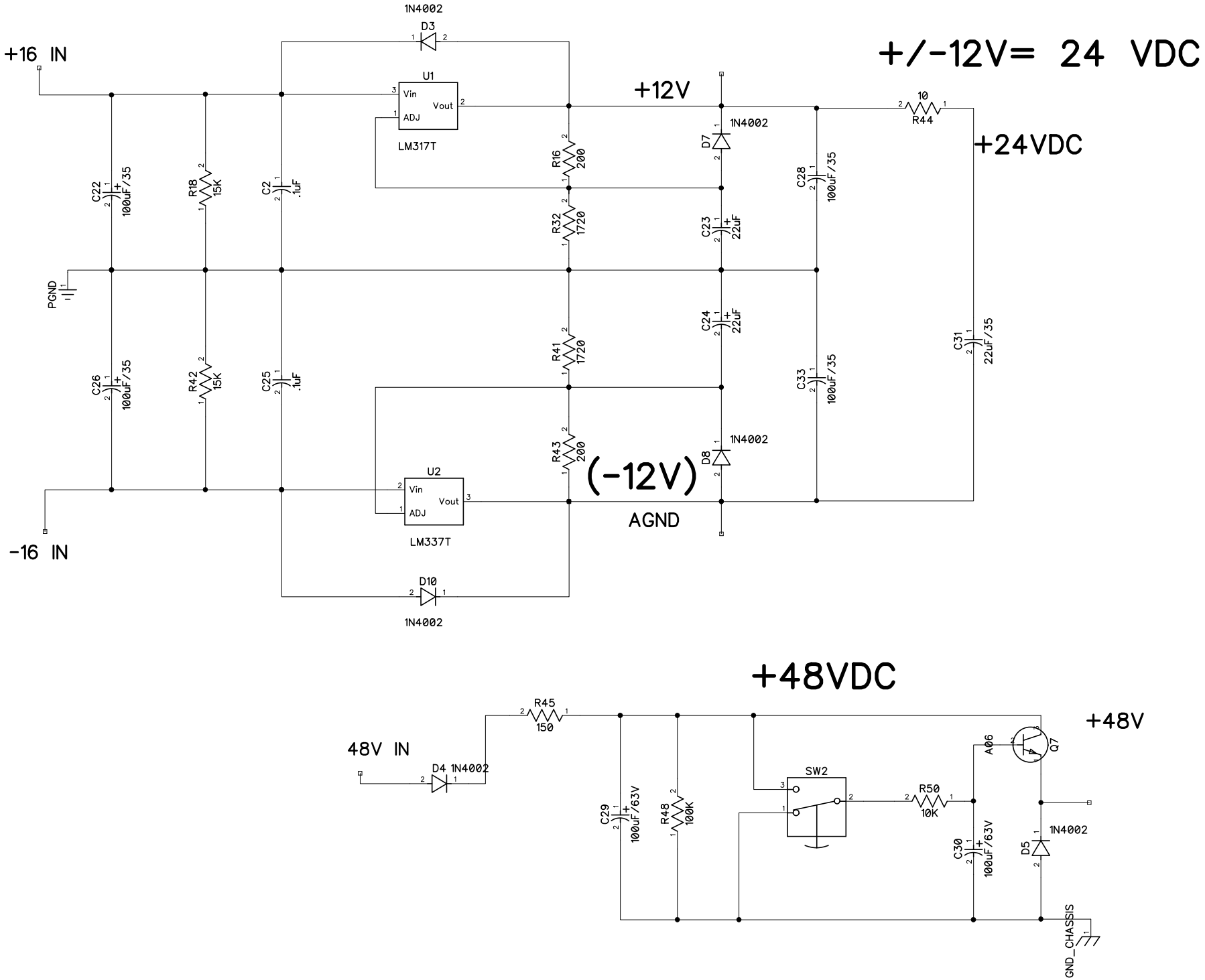
+/-12V= 24 VDC
+16 IN
-16 IN
1N4002
D3
U1
Vin
Vout
ADJ
LM317T
+12V
1N4002
D7
10
R44
+24VDC
R16
200
R32
1720
C22
100uF/35
R18
15K
C2
.1uF
C28
100uF/35
C23
22uF
PGND
C24
22uF
R41
1720
C31
22uF/35
C26
100uF/35
R42
15K
C25
.1uF
C33
100uF/35
R43
200
1N4002
D8
(-12V)
U2
Vin
Vout
ADJ
LM337T
AGND
D10
1N4002
+48VDC
+48V
48V IN
R45
150
D4 1N4002
C29
100uF/63V
R48
100K
SW2
R50
10K
A06
Q7
C30
100uF/63V
D5
1N4002
GND_CHASSIS

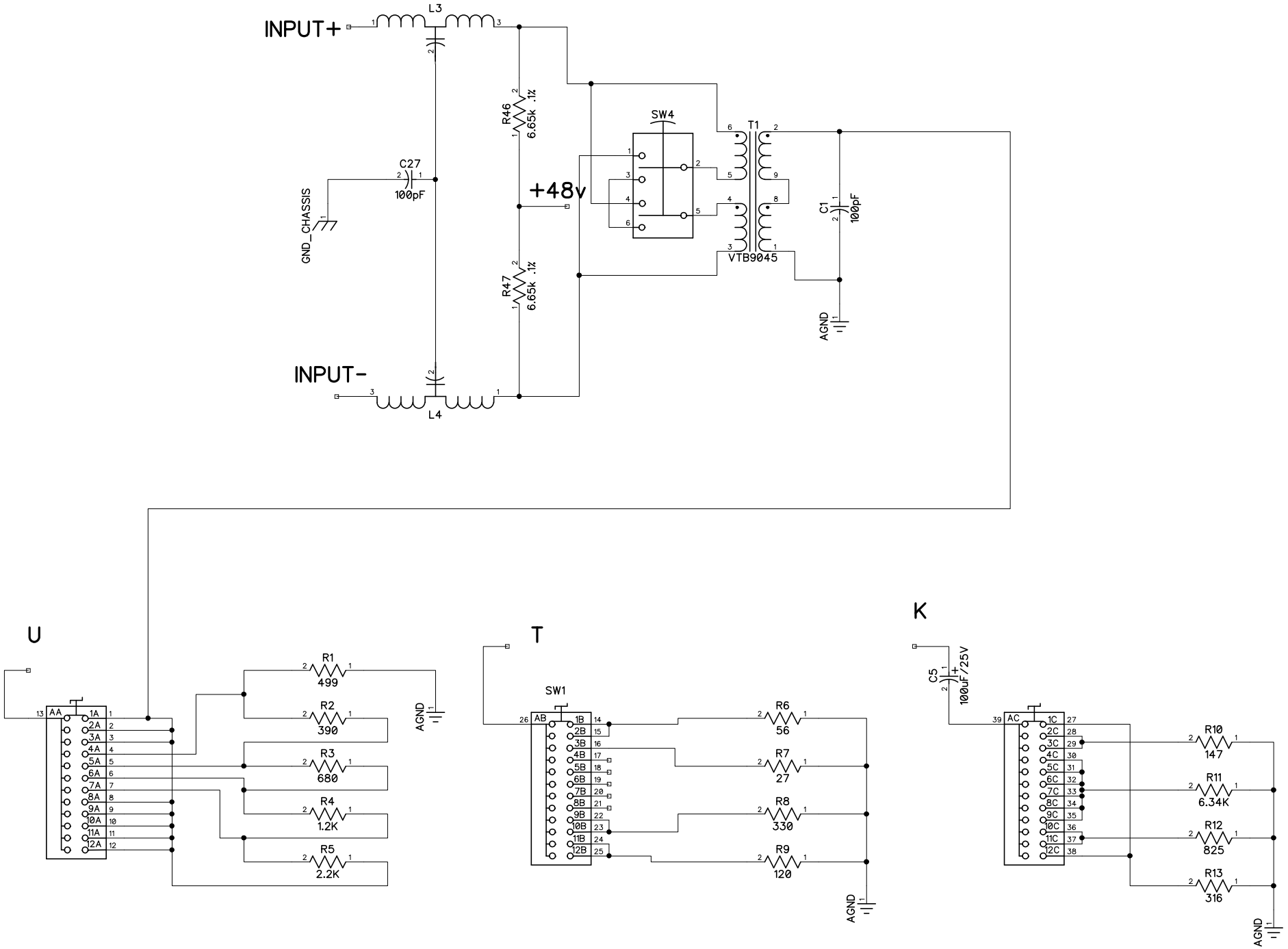
INPUT+
INPUT-
L3
L4
R46
6.65k .1%
R47
6.65k .1%
C27
100pF
GND_CHASSIS
+48v
SW4
T1
VTB9045
C1
100pF
AGND
U
R1
499
R2
390
R3
680
R4
1.2K
R5
2.2K
AGND
T
SW1
R6
56
R7
27
R8
330
R9
120
AGND
K
C5
100uF/25V
R10
147
R11
6.34K
R12
825
R13
316
AGND

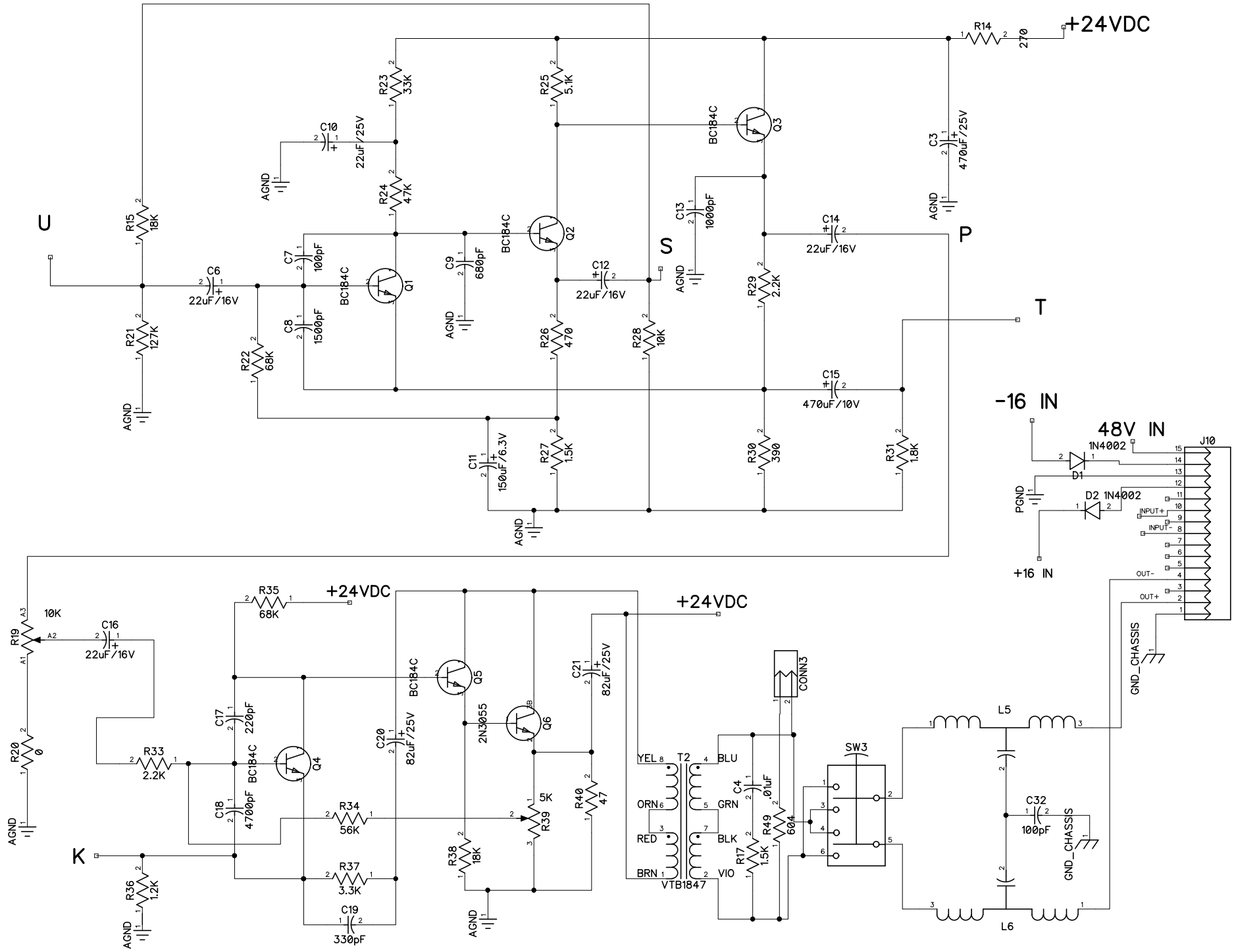

+24VDC
R14
270
R23
33K
R25
5.1K
C10
22uF/25V
AGND
R24
47K
BC184C
Q3
C3
470uF/25V
U
R15
18K
C7
100pF
C9
680pF
Q2
C13
1000pF
C14
22uF/16V
P
S
C6
22uF/16V
Q1
C12
22uF/16V
R29
2.2K
T
R21
127K
C8
1500pF
R26
470
R28
10K
R22
68K
C15
470uF/10V
-16 IN
48V IN
1N4002
J10
D1
PGND
D2 1N4002
INPUT+
INPUT-
+16 IN
OUT-
OUT+
C11
150uF/6.3V
R27
1.5K
R30
390
R31
1.8K
R35
68K
+24VDC
+24VDC
R19
10K
C16
22uF/16V
C21
82uF/25V
CONN3
GND_CHASSIS
C17
220pF
Q5
2N3055
Q6
L5
R20
0
R33
2.2K
Q4
C20
82uF/25V
YEL
T2
BLU
SW3
C18
4700pF
R34
56K
5K
R39
R40
47
C4
.01uF
ORN
GRN
R49
604
C32
100pF
K
R38
18K
RED
BLK
R17
1.5K
R36
1.2K
R37
3.3K
C19
330pF
BRN
VIO
VTB1847
L6